RL4090 SPECIFICATION

www.vicoimaging.com

Notes:

1. The Chart Size is calculated according to the maximum field Angle of the relay lens;
2. WDV: Working Distance between the Visual Image of Chart and CCM top;
3. WDC: Working Distance between the Chart and Relaylens Object End;
4. MDR: Mounting Distance for Relay Lens from CCM top;
5. TOTR:Distance from the camera module to the test card.
6. The length and width of chart are calculated according to the chip specifications 4:3 or 16:9 of the camera module.

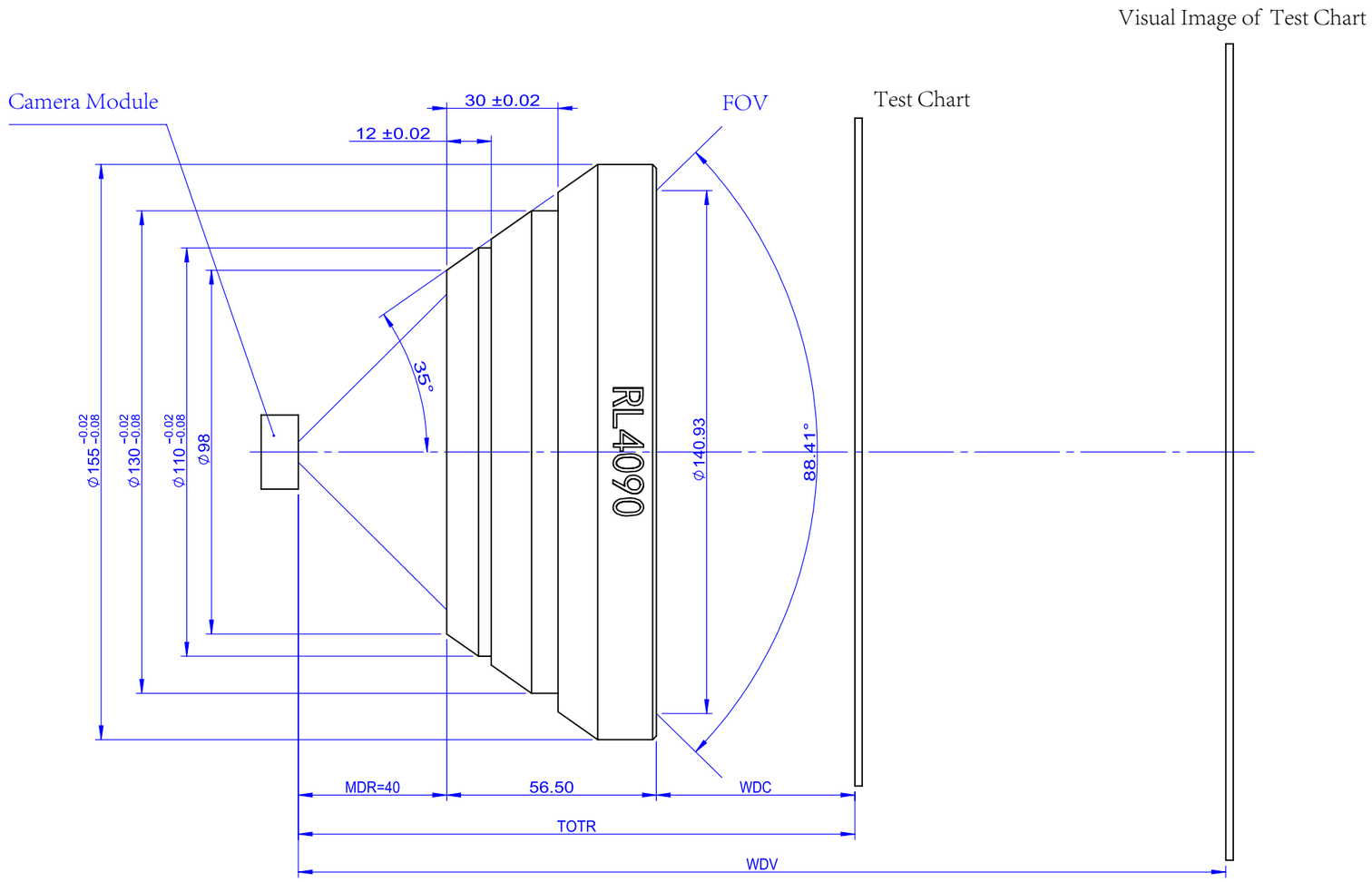

WDV	WDC	TOTR	Chart Size@Max FOV				
			Diagonal	4:3(WxH)		16:9(WxH)	
400	150.7	247.2	433.8	347.0	260.3	378.1	212.7
1000	258.1	354.6	645.1	516.1	387.1	562.3	316.3
2000	320.9	417.4	768.6	614.9	461.2	669.9	376.8
3000	347.4	443.9	820.8	656.6	492.5	715.4	402.4
5000	371.3	467.8	867.8	694.3	520.7	756.4	425.5
8000	386.0	482.5	896.7	717.4	538.0	781.6	439.6
10000	391.1	487.6	906.8	725.4	544.1	790.3	444.6
30000	405.3	501.8	934.7	747.8	560.8	814.7	458.2
50000	408.3	504.8	940.5	752.4	564.3	819.7	461.1
1000000000	413.3	509.8	950.4	760.3	570.2	828.3	465.9

Focal Length(mm)	485
Distortion(%)	0.9
MAX FOV(°)	90
Weight(kg)	1.68
Exit Pupil Aperture(mm)	5.5
MDR(mm)	40
WDV(mm)	400~INF
Wavelenght(nm)	420-940 nm

Lontry®

INFORMATION HEREIN SHALL NOT BE REPRODUCED IN ANY FORM WITHOUT COLIBRI WRITTEN PERMISSION

TOLERANCE CLASS NOT SPECIFIED

Dimensional tol./Masstol. ISO 2768-1:1989 — tol.-class/Tol.-k

Geometrical tol./Form-u. Lagetol. ISO 2768-2:1989 — tol.-class/Tol.-k

DESIGN	Derek	2021.12.11	MACHINE MODEL:	RL4090	
CHECKED					
APPROVED			TITLE:	RL4090 SPECIFICATION	
MATERIAL:	Product				
			QTY	-	TREATMENT
SIZE	A3	UNIT	mm	DWG/N	LT0116
SCALE	1:2	WT(kg)	1.68	REV.	
				SHEET	1/1